

纪龙**科技**
走向**未来**

JILONG Technology Towards Future

瑞安市纪龙汽车电器有限公司创建于 2003 年，是一家专业生产汽车起动机及汽车起动机转子，汽车智能中控门锁等汽车零部件的国家高新技术企业。公司坐落于中国汽摩配之都 ： 浙江省温州环大罗山高山科技园万景路 518 号。厂房建筑面积 15,000 多平方。经多年发展，纪龙公司已成为一家集科研、开发、设计、生产及销售为一体的现代化企业，并已通过 IATF16949:2016 国际汽车质量管理体系标准。目前，公司旗下已拥有 "JILONG"、" 纪龙 "、"SEAM" 和 "JHEOC" 四大知名品牌。公司加入温州市政府 " 万亩千亿 " 产业园项目，2023 年初搬迁至新厂房，产值将达到 3 亿元。

RUIAN JILONG AUTOMOBILE ELECTRIC APPLIANCES CO., LTD. was founded in 2003. It is a national high-tech enterprise specializing in the production of car electric central locking system, automobile starters and auto parts . The company is located in the " City of Auto Parts" : No.518 Wanjing Road, Luofeng North Industrial Zone, Ruian , Zhejiang, China, with a factory building area of 15,000 square meters. Over time, JILONG has become a modern enterprise that integrates scientific research, development, design, production and sales together. Moreover, the company has passed the international automobile quality management system standard IATF16949:2016 and owns four well-known brands now, they are "JILONG", "纪龙", "SEAM" and "JHEOC".
We have joined the Wenzhou Municipal Government Investment promotion project and will relocate to a new plant in early 2023. The output value will reach to 300 million Yuan.









国家高新技术企业 | 浙江省科技企业 | 温州市品牌产品 | IATF 16949:2016

www.chinastarter.com

愿景 Vision
成为国内行业引领者
Become the domestic industry leader

使命 Mission
为员工创造平台 为客户创造价值 为社会创造财富
Create platforms for employees, create value for customers and create wealth for society

品质理念 Quality Concept
引领创新, 铸就品质, 锁定机遇, 启动未来
Lead innovation, cast quality, lock opportunities and start the future

宗旨 Purpose
您的满意是我们的追求
Your satisfaction is our pursuit

Jilong纪龙

Specializing in Starter Motors, Alternators, Door Lock Actuators And Other Auto Parts

We Have Passed IATF 16949:2016

Jilong纪龙

瑞安市纪龙汽车电器有限公司
RUIAN JILONG AUTOMOBILE ELECTRIC APPLIANCES CO.,LTD.

地址:浙江省瑞安市塘下镇罗凤北工业区万景路518号
ADD: No.518 Wanjing Road,Luofengbei Industrial Zone,Tangxia,Ruian,Zhejiang,China

网址/Web: www.chinastarter.com
网络实名:纪龙汽车起动机，CHINASTARTER

电话/Tel: +86-577-65271383
外贸电话/Tel: +86-577-58803807 +86 577-58803810 +86-577-58803820 +86-577-58803821
传真/Fax: +86-577-65270383(内贸) 58803811(外贸)
邮箱/E-mail: sales8@jilongstarter.com P.C: 325204

FaceBook 微信公众号

RUIAN JILONG AUTOMOBILE ELECTRIC APPLIANCES CO.,LTD
瑞安市纪龙汽车电器有限公司

起动机系列 Starter Motor Series

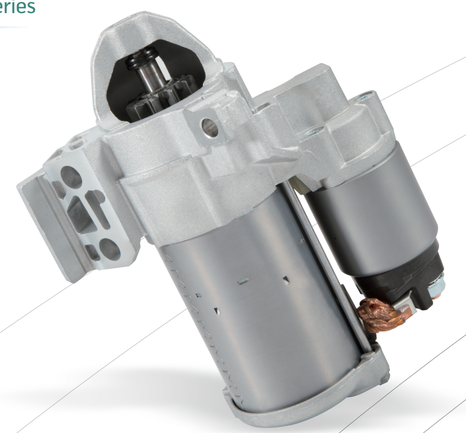

起动机
Starter Motor

起动机是引导内燃机从静止状态进入自动工作状态的关键部件，它们之间就像火柴和蜡烛的关系。启动机是有直流电机、控制系统、输出系统组成，启动机的优劣会影响内燃机从静止达到其自动工作时的转速要求。

The starter is a key component that guides the internal combustion engine from a static state to an automatic working state. The relationship between them is like a match and a candle. The starter is composed of a DC motor, a control system, and an output system. The pros and cons of the starter will affect the speed requirements of the internal combustion engine from a standstill to its automatic operation.

公司目前有 800 多种起动机，400 多种转子，拥有三菱、电装、日立等 10 多个系列起动机产品。公司产品在乘用车售后市场已达 80% 以上覆盖率，在中高端乘用车市场备受客户青睐。

At present, we have more than 800 types of starters and more than 400 types of armatures, including series of Mitsubishi, Denso, Hitachi, Valeo, Bosch series, etc. Our products has reached more than 80% coverage in the passenger car aftermarket and are favored by customers in the middle and high-end market.

了解详情

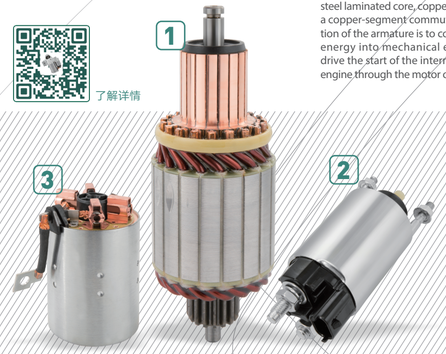

1 起动机电枢
Starter Armature

起动机转子（电枢）是起动电机的关键部件，好比是电机的心脏。它是由换向器、转子轴、铁芯组件、转子铜线组成。转子的功能是把电能转换成机械能，通过电机输出系统拖动内燃机的启动。

The armature is the key component of the starter motor, like the heart of the starter motor. It is composed of a steel shaft, a steel laminated core, copper windings, and a copper-segment commutator. The function of the armature is to convert electrical energy into mechanical energy, and to drive the start of the internal combustion engine through the motor output system.

2 电磁开关
Starter Solenoid

电磁开关是启动电机的控制部件，负责启动电机的工作和停止，同时肩负着起动电机的动力输出。它有动静触点、线圈绕组、铁芯组件、回位弹簧组成。开关的优劣决定着起动机的可靠性能。

The starter solenoid is the control component of the starter motor, which is responsible for the work and stop of the starter motor. At the same time the solenoid shoulders the power output of the starter motor. It is composed of dynamic and static contacts, a coil winding, an iron core, and a coil spring. The quality of the solenoid determines the performance of the starter.

3 起动机定子总成
Starter Field Case Assembly

起动机定子总成的功能是把电瓶的直流电能转换成磁场势能，转子通电后产生机械能，从而实现起动机的工作。

The function of the field case assembly is to convert the DC electric energy of the battery into the magnetic field potential energy. After the armature is energized, mechanical energy is generated to realize the work of the starter.

发电机系列 Alternator Series

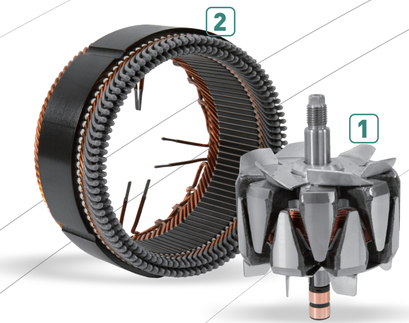

1 发电机转子
Alternator Rotor

发电机转子是能量转换的关键部件，它的工作原理是发电机转子产生的旋转磁场来切割定子绕组，从而产生电流。其质量的优劣关系到发电机的可靠性。

The rotor is a key component of energy conversion process in an alternator. Its working principle is that the rotating magnetic field generated by the alternator rotor cuts the stator windings to produce electric current. Its quality is related to the reliability of the alternator.

2 发电机定子
Alternator Stator

发电机定子的工作原理是在转子形成的旋转磁场里切割磁场并产生电压从而输出稳定的直流电供车辆上的电器使用。发电机定子是车辆上的动力源泉，它的质量直接关系到车辆的安全使用。

The working principle of the alternator stator is to cut the magnetic field and generate a voltage to output a stable AC. That current travels along fairly heavy gauge wire through the case and into the rectifier/regulator which converts it to DC power, and at a consistent output. The stator is the power source of the vehicle, and its quality is directly related to the safe use of the vehicle.

发电机
Alternator

发电机是车辆上电瓶的唯一充电部件，也是车辆上所有电器的电力提供者。发电机由发动机提供动力，负责把机械能转换成电能。它是由转子组件、定子组件、电刷、调节器组件组成。发电机的质量优劣关系到车辆的安全和运行。

The alternator is the only charging component of the battery on the vehicle, and it is also the power provider for all electrical system on the vehicle. The alternator is powered by the engine and it is responsible for converting mechanical energy into electrical energy. The alternator is composed of rotor, stator assembly, brush holder, and voltage regulator. The quality of the alternator is related to the safety and operation of the vehicle.



公司目前拥有发电机 200 多款，
并在以每年 20 款的速度开发新产品。

At present, we have more than 200 types of alternators and are developing new products more than 20 models each year.

汽车中控门锁系列
Central Door Lock Actuator Series

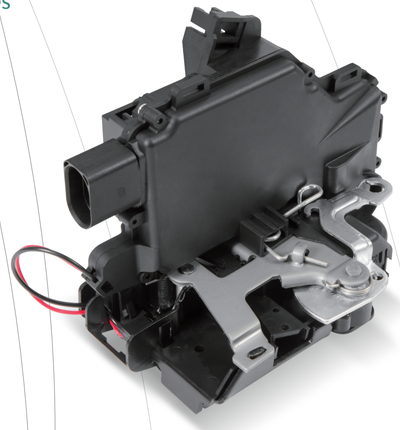

汽车中控门锁
Central Door Lock Actuator

汽车中控门锁（简称中控门锁）是为了使用方便和安全，对车门的锁闭和开启实行集中控制的重要电子和机械执行机构。
工作原理是接收到中央控制器发出的上锁或解锁指令后，通过电能驱动微电动机，来控制上锁或解锁，实现用内把手或外把手开启车门。

Automobile central door lock actuator is an important electronic and mechanical assembly that implements centralized control of the locking and opening of the door for convenience and safety.
The working principle is that after receiving the locking or unlocking instruction from the central controller, the micro-motor is driven by electric energy to control the locking or unlocking of the door, so that the door can be opened with the inner or the outer handle.

了解详情

公司已成功开发大众、奥迪、菲亚特、欧宝、奔驰，宝马、标致等系列汽车智能中控门锁、汽车尾门锁和汽车尾门开关 200 多个品种，同时公司正大力引进技术人才，进行新品研发。

We have successfully developed more than 200 varieties of door latches and tailgate switches that suit for Volkswagen, Audi, Fiat, Opel, Mercedes-Benz, BMW, and Peugeot. At the same time, we are still constantly introducing technical talents to develop new products.

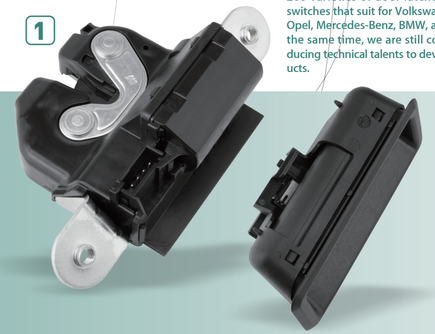

1 尾门把手开关
Tailgate Release Switch

尾门把手开关是一种集成电路与开锁把手组合而成的行李箱（后备箱）把手。触动把手就会触发汽车尾门锁或行李箱（后备箱）锁通电，从而实现开启汽车行李箱的功能。

The tailgate release switch is a trunk handle that combines an integrated circuit and an unlocking handle. Touching the button will trigger the car's tail door lock or the trunk lock to be energized, thereby realizing the function of opening the car's trunk.

Jilong纪龙